BORRELLI COMMERCIAL EQUIPMENT

Borrelli Ice Machine 30–120kg User Manual

IM-30 · IM-50 · IM-80 · IM-120

Flammable refrigerant This product contains R290 flammable gas. Misuse could result in fire or serious injury. If you find a gas leak, turn off the unit and ventilate the area.

01 Warnings and Safety

These precautions ensure safe, correct use of the ice machine and minimise the risk of injury or damage.

Electrical safety

- Do not use mechanical devices to accelerate defrosting unless recommended by the manufacturer.
- Do not put anything other than water into the machine for ice production.
- Never chip or force ice off the evaporator – use the de-icing cycle.
- Use a dedicated, properly earthed wall outlet. Position the machine so the plug remains accessible.
- Keep the machine and power cord away from flammable materials. Do not cover or submerge the cord.
- Avoid extension leads or sharing the outlet with other appliances.

Ventilation

- Keep all vents clear while the machine is operating.
- Connect the machine to a potable (drinking-quality) water supply only.
- Do not damage the refrigerant circuit.

Servicing

- All repairs, disassembly or modification must be performed by a qualified technician. Do not remove any components of the unit. In Queensland, gas work on the R290 refrigerant circuit requires the appropriate gas work authorisation.
- Dispose of the unit only at an authorised waste centre; do not expose it to a flame.

Restart delay

- After switching off, wait 5 minutes before restarting – restarting too soon can overload the compressor.

Additional precautions

- Disconnect the machine from power before manual cleaning, maintenance or replacing parts.
- Do not operate the machine with a damaged cord or plug. Unplug by holding the plug, not pulling the cable. Do not modify or sharply bend the power cord. If the power cord is damaged, have it replaced by a qualified technician.
- Keep the machine upright on a firm, level surface and supervise children near it. Do not place heavy objects or containers of liquid on top of the machine.

Not a household appliance This machine is intended for commercial use by trained staff. The storage bin is not refrigerated — ice will melt over time.

02 Installation

Before use

- Supplied accessories: ice scoop, water supply valve/filter, waste pipe, filter brackets and replacement seals. Check that all parts are present and contact Borrelli if anything is missing. Inspect the unit for damage and contact Borrelli within 48 hours of delivery if any damage is found.
- Remove all packaging. Always transport the machine upright. Do not tilt the machine more than 45° during transport. Protect the power cord at all times. After transport, leave the machine standing upright for at least 24 hours before switching it on. This allows the refrigerant to settle before startup.
- Clean the interior and the storage bin with lukewarm water and run the self-cleaning programme before first use.
- Discard the first two batches of ice.

Positioning

- Install on a flat, stable surface sturdy enough to support the loaded unit, indoors and out of direct sunlight or heat.
- Keep the machine in a temperature-controlled environment, not exposed to rain or weather.
- Leave at least 150 mm on each side and behind the machine for ventilation. Keep all vents clear.

Water and drainage

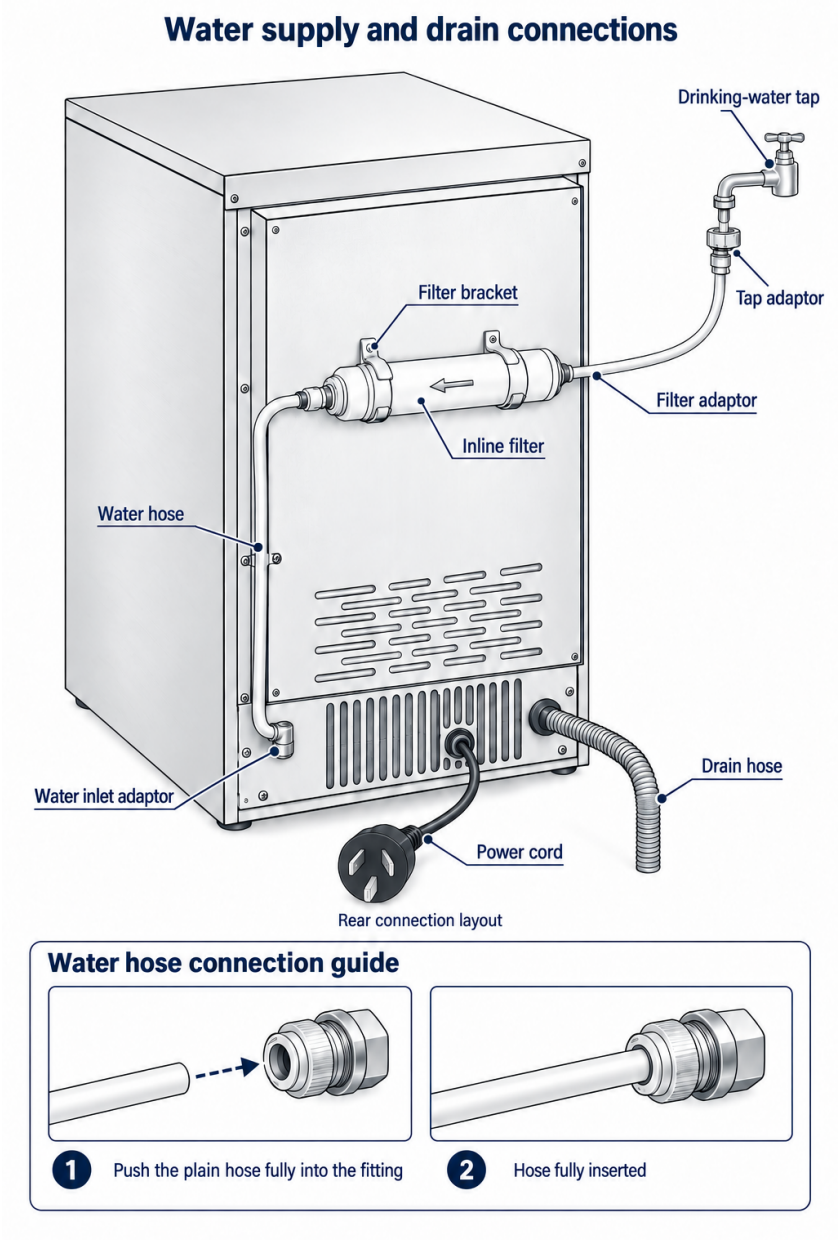

Water supply and drain connections, with a separate guide showing a plain hose inserted into a standalone fitting. Open diagram full size

1. Keep the machine switched off and unplugged while connecting it. Use a potable (drinking-quality) water supply only. The connected water supply pressure must be 100–400 kPa (14.5–58 psi).

2. Check the labels on the water supply pipe and drain pipe before connecting them. Connect the tap adaptor, filter and water hose to the machine inlet. Follow the flow arrow on the filter and secure it in its bracket.

3. Push the water hose fully into the supplied push-fit adaptor. Do not confuse the water inlet with the drain outlet.

4. Connect the drain before use. Push the drain pipe fully into the rear fitting until it locks in place. The drainage point must be below both the machine itself and its drain outlet, as drainage is gravity-fed. Route the drain hose without kinks or uphill sections.

5. Turn on the water and check the inlet, filter and hose connections for leaks. Check that the drain runs freely before starting ice production.

Ensure both ends of the water supply pipe are secured with Teflon tape. If you are unsure, consult a licensed plumber. We recommend having a plumber check the water and waste connections.

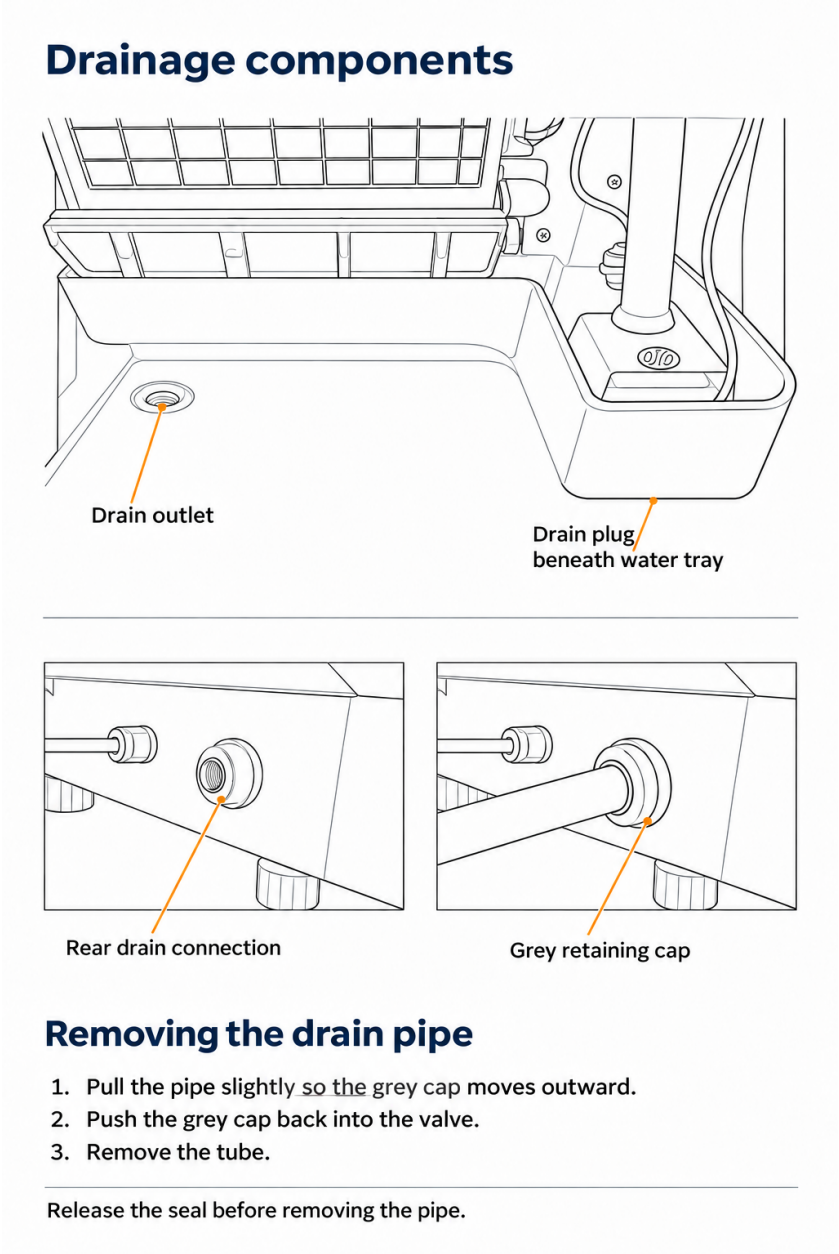

Drainage components and drain pipe removal. Open drainage diagram full size

To remove the drain pipe: release the seal by following these steps.

1. Pull the drain pipe slightly so the grey seal cap moves outward.
2. Once there is some tension, push the grey cap back into the valve.
3. Remove the tube from the unit.

Release the seal first Do not pull the drain pipe out without first releasing the seal, as this puts pressure on the drain seal.

03 Cleaning

Disconnect first Always disconnect the power cord from the wall before cleaning.

Exterior and interior

- For dust, wipe inside and out with a dry cloth.
- For a deeper clean, use a mild detergent and a soft cloth. Do not use strong detergents.

- Clean the unit regularly. Empty and clean the storage bin once a week and discard old ice. Clean the machine before using it again after a long period of disuse.
- Never use polishing powder, soap powder, benzine, oil or hot water — these damage the paint and plastic.

After cleaning, check the power cord for cracks or damage. If you find any, contact Borrelli.

Do not wash with water Do not splash or wash the unit with water directly — this could cause a short circuit or shock. Never use a steam cleaner or water jet to clean the machine.

Self-cleaning programme

Run the self-cleaning programme regularly. Mix equal parts water and vinegar, or equal parts water and lemon juice (1:1), and add the cleaning solution to the water tray. Press and hold On/Off for 3 seconds to put the machine in standby, then press and hold **Timer/Clean** for about 3 seconds, then release to start the self-cleaning programme. The self-cleaning programme takes approximately 30 minutes. During the cycle, the machine rinses its interior several times.

When the programme has finished, switch off and unplug the machine before draining or removing parts. Remove the drain cap underneath the water tray and drain out all the used cleaning solution, then refit the drain cap securely. Add fresh drinking-quality water to the water tray up to the water-level mark. Reconnect the power, put the machine in standby by holding On/Off for 3 seconds, then hold Timer/Clean for about 3 seconds and release to run the cleaning programme again with fresh water to rinse out the vinegar or lemon juice residue. Once this rinse cycle has finished, switch off and unplug the machine, remove the drain cap and drain out all the rinse water, then refit the cap securely. Dry the interior with a clean, soft cloth before returning the machine to use. Never mix cleaning chemicals.

04 How to Use

The unit is operated from the control panel on the front. The display shows the ice-making time or a countdown. The water tray fills automatically when the machine is switched on.

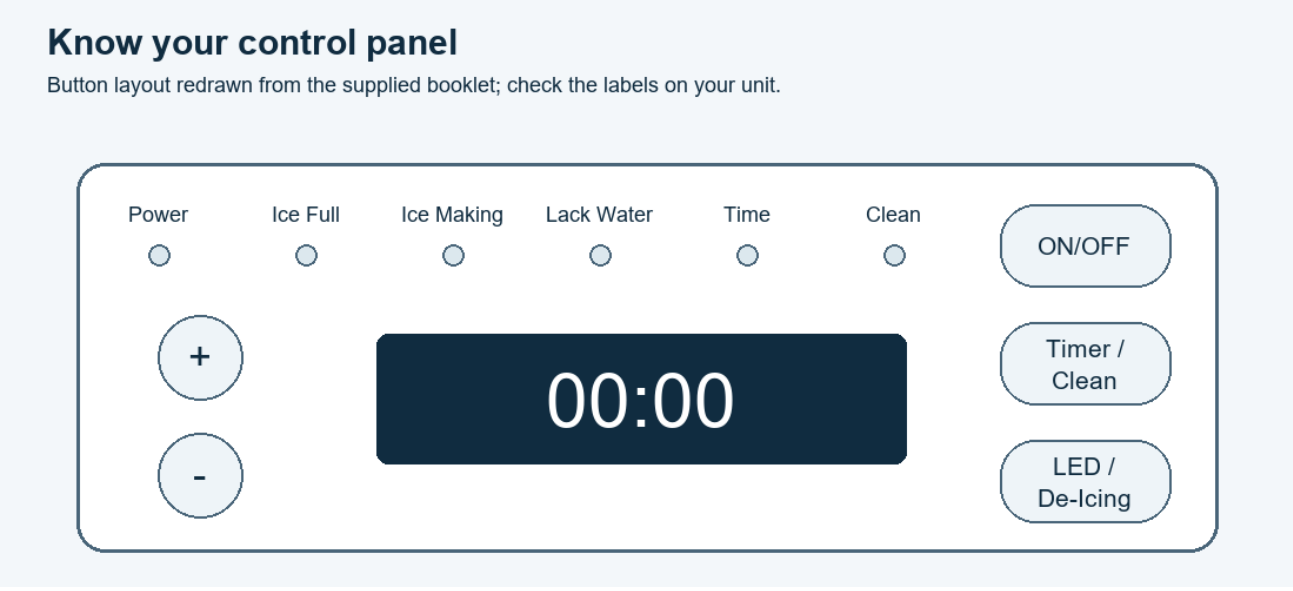

Control layout from the supplied booklet. Labels and functions may vary with the controller version. Open diagram full size

Button functions

- **ON/OFF** – press to turn the unit on; press and hold for 3 seconds to enter standby (off).
- **Timer / Clean** – use this button to adjust the ice-making time, then use the + and – buttons to change the setting shown on the display. A higher setting produces thicker ice. In standby, press and hold for 3 seconds to begin the cleaning cycle. Follow the cleaning instructions for your controller version.

- **LED / De-Icing** – press to turn the interior LED light on and off; while making ice, press and hold for 3 seconds to start a de-icing (harvest) cycle.
- **Up (+)** and **Down (–)** – adjust the time shown on the display. Longer time makes thicker ice.

Indicator lights

- **Power**: the unit is switched on. **Ice Full**: the sensor flap is held down by ice – the bin is full and the machine pauses.
- **Ice Making**: a batch of ice is being made. **Lack Water**: A red light indicates that the water tray is empty. Check that the water supply tap is on and the inlet pipe is clear.
- **Time**: when this light is on, the LED display shows a countdown of the ice-making time. **Clean**: the cleaning cycle is running.

Adjusting ice thickness

Ice thickness is controlled by ice-making time.

1. Push and hold the Timer/Clean button to display the current time setting, then use the up **+** or down **–** arrow to adjust the ice-making time.
2. More time produces thicker ice; less time produces thinner ice.
3. The adjusted time applies to the next ice-making process. Check the next batch before adjusting again.

- **Thicker ice:** use setting 6, 7 or 8.
- **Thinner ice:** use setting 4, 5 or 6.

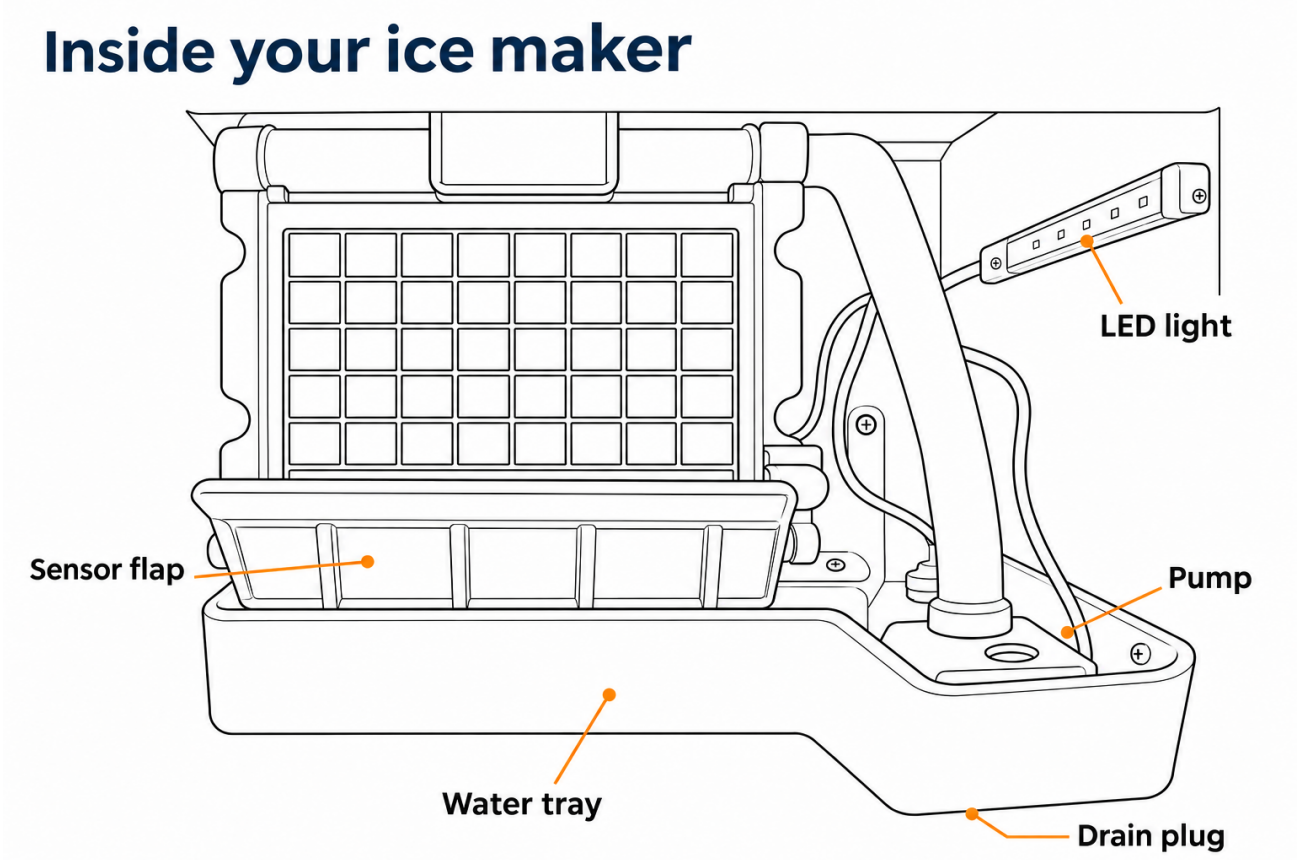

Inside your ice maker. Open interior diagram full size

Sensor flap

- The sensor flap tells the unit when to stop making ice; when it is held down by ice, ice-making pauses.
- If the sensor flap is held down by ice, remove the ice so it can move freely and production can resume.

05 Tips and Tricks

Follow these tips to get the best performance, efficiency and lifespan from the machine.

Water quality

- Use a potable water supply; a filter improves clarity and reduces scale.
- Flush the machine after any interruption to the water supply.

Condenser

- Clean the condenser regularly to clear dust – a clogged condenser reduces output and shortens the compressor's life.

Long shutdown

- Switch off, drain the water, clean the bin and leave the lid open to air.

The storage bin is not refrigerated. Ice melts over time; make only what you need.

06 Specifications

Specifications. Dimensions in millimetres unless stated.

Specification	IM-30	IM-50	IM-80	IM-120
Ice output / 24 h	30 kg	50 kg	80 kg	120 kg
Storage bin	5 kg	7 kg	15 kg	30 kg
Cube size	22 mm	22 mm	22 mm	22 mm
External W×D×H	380×420×600	400×550×750	500×625×840	680×620×920
Weight	20 kg	27 kg	45 kg	51 kg
Power	220–240 V	220–240 V	220–240 V	220–240 V
Plug	10 A	10 A	10 A	10 A
Material	304 S/S	304 S/S	304 S/S	304 S/S
Install kit	Included	Included	Included	Included

Dimensions in mm; cube 22 × 22 × 22 mm; 304 brushed stainless steel. From borrelli.com.au. Leave at least 150 mm on each side and behind the machine for ventilation. Supplied with an installation kit. IM-120 is also sold as the clearance-stock IM-120CL (same specification).

07 Before Requesting Service

Please check the following if you encounter a problem. If it continues after these checks, contact Borrelli.

Common problems and what to check first.

Problem	What to check
Machine will not start	Is the power supply interrupted? Is the power cord securely connected? Is a fuse blown or the breaker tripped?
No ice, or ice too thin	Is the water supply turned on and the inlet filter clear? Is the batch time set too short? Is the ambient temperature too high?
Machine stops mid-cycle	Is the storage bin full, with the sensor flap held down by ice? Is the condenser clogged with dust?
Excessive noise	Is the machine level and clear of the wall? Is anything resting on it?

Fault codes

If your controller shows one of these codes, note it before contacting support. Check that your controller matches this guide; controller versions can vary.

Code	Meaning	What you can check
F1	This error code means “Water Pumping Overtime”	This implies that one of 4 things could be occuring: • No water supply • Water valve failure • Water pump failure • PCB failure This will need to be fixed, and the relating components will need to be changed.
F2	This error code means “Ice Full”.	There will blocks of ice holding down the sensor flap. Please remove these blocks of ice so the flap can freely move. This will restore the unit to its funtional mode.
F3	Sensor failure.	The sensor is broken or has short circuited. This will need to be resolved by a qualified technician.
F4	“Ice Falling Failure”. The ice is being made too thick.	To rectify this issue, see Adjusting ice thickness. Once changed, power off the machine, let the cubes drop off, restart the machine and adjust the cube to “thin”.

Other symptoms

- **Water overflowing:** turn off the water supply and contact Borrelli; the booklet identifies pressure or float-control issues.
- **Water present but no ice:** check external water supply and ventilation. Internal pump, spray pipe, compressor or control-board work requires a technician.
- **Fan not operating or persistent poor cooling:** switch off and contact Borrelli. Do not remove guards or attempt internal electrical repairs.
- **Ice Full stays on:** clear ice from the sensor flap. Do not force or bypass the flap.

Have the model, serial number, displayed code and a description of the fault ready when contacting support.

08 Warranty and Enquiries

Warranty periods vary by product. For the period that applies to your model, see its product page. For the warranty terms and how to make a claim, see our Terms & Conditions. Keep your proof of purchase, as it may be required.

Need help with this unit?

Have the model number and serial number from the rating plate ready, and our team will help you sort it out.

Call 03 9783 6325
Email Support